Drainage Water Quality Impacts of Various In-field Nutrient Management Practices:

Northeast Research and Demonstration Farm

The Northeast Research and Demonstration Farm (NERF) has 36 1-acre research plots equipped with a drainage water monitoring system installed in 1988 (Figure 1). Plots have 1-4 percent slope with Kenyon, Floyd, and Readlyn soils. Tile lines are installed at a depth of four feet spaced 95 feet apart (Figure 2). Management practices are evaluated for their impact on nitrate-N and dissolved phosphorus (P) loss and crop yield. To quantify the impact of these practices, researchers are monitoring subsurface drainage volume and collecting flow-proportional water samples for nitrate-N and dissolved P analysis (Figure 3). The 30-year average annual rainfall for NERF is 29.7 inches. The average tile drainage flow from 2001-2015 is 4.5 inches.

At NERF, multiple management practices have been examined for their impact on N and P loss and crop yield:

Crops: Continuous corn, corn-soybean rotations, extended corn-oats-alfalfa rotation (1993-1998)

Management Practices: Rye cover crop, tillage/no-till, swine manure/urea ammonium nitrate (UAN), varied N application rates and timing, stover removal, nitrification inhibitor

Figure 1. Drainage monitoring plots at Northeast Research and Demonstration Farm.

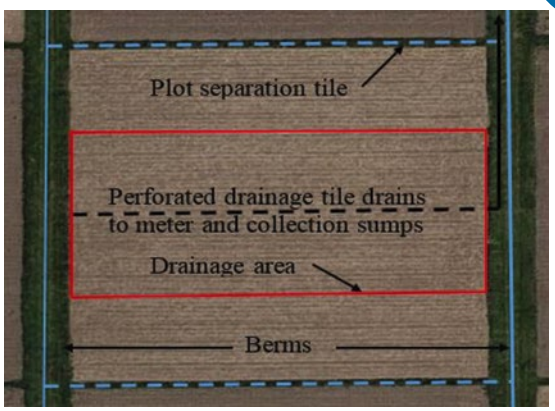

Figure 2. Schematic of the drainage plot setup.

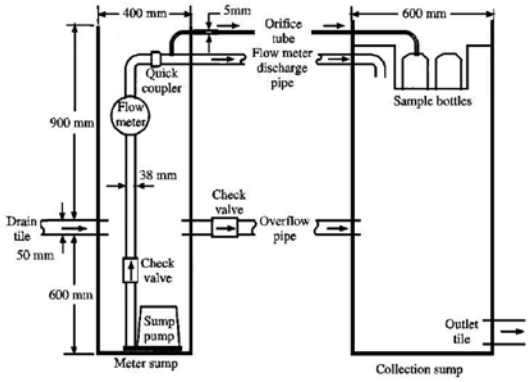

Figure 3. Schematic of the drainage monitoring system.

Key Findings from 27 Years of Research (1990-2016):

- Corn-soybean-oat strip crop and alfalfa forage systems resulted in the lowest nitrate-N concentrations (<10 mg/L) in subsurface drainage water in comparison to other practices evaluated at this site from 1993-1998.
- Continuous corn systems required higher input of N fertilizers and resulted in significantly higher nitrate-N leaching losses compared to corn-soybean rotations fertilized with manure or urea ammonium nitrate (UAN).
- Over a 15 year period, fall manure applied to both corn and soybeans resulted in significantly higher nitrate-N concentrations than fall manure on corn only in a corn-soybean rotation (31 vs 19 mg/L).

Material for Nitrogen and Water Week, June 27-29, 2017.

AE 3616 June 2017

- A cereal rye cover crop significantly reduced nitrate-N concentrations in drainage water compared to a similar treatment without a cover crop (10 mg/L with cover crop vs 14 mg/L without cover crop).
- An eight-year study found minimal difference in dissolved P concentrations in drainage water from six different management systems, with total losses less than 0.03 lb/acre yr from all systems.
- Stover removal in a continuous corn system had no significant impact on nitate-N or dissolved P levels in drainage water.
- Chisel plowed and no-till plots had similar overall nitrate-N concentrations and total N losses via subsurface drainage water.
- Total nitrate-N losses averaged over the years 2008-2015 ranged from 13.6 lb/acre/yr from a corn-soybean no-till rye cover crop treatment with spring application of UAN to 34.4 lb/acre/yr from annual swine manure applied to continuous corn (Figure 4).

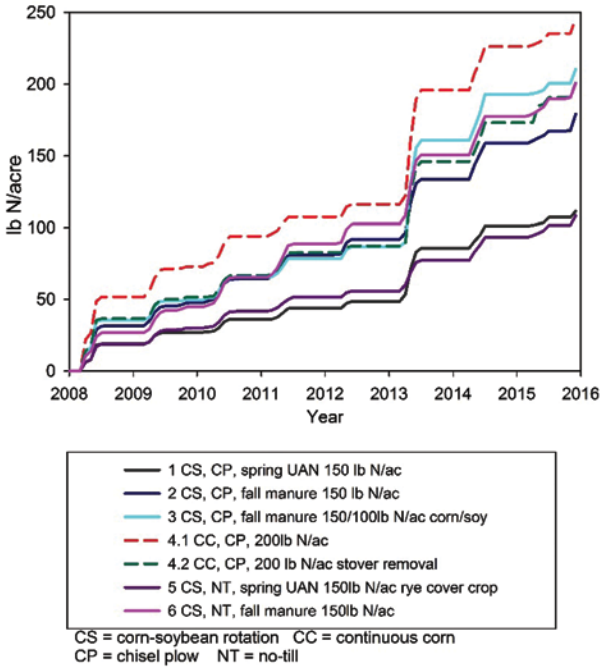

Figure 4. Cumulative nitrate-N losses from 2008 - 2015.

Ongoing Research and Preliminary Findings:

Since 2016, treatments aim to study the impacts of N-management and in-field practices, including:

1. Early fall vs. late fall vs. spring application of swine manure
2. Conventional tillage vs. no-till
3. Cereal rye cover crop vs. no cover crop
4. Nitrification inhibitor
5. One ton/acre gypsum application

Preliminary findings:

- Flow-weighted nitrate-N concentrations in 2016 tile drainage water ranged from 10.3 mg/L (spring UAN at 150 lb N/acre) to 18.5 mg/L (fall manure on continuous corn at 200 lb N/acre).
- There was no significant difference in nitrate-N concentrations between late fall and spring swine manure applications for 2016.
- A rye cover crop significantly reduced flow-weighted nitrate-N concentrations in both corn (11.3 mg/L with cover crop vs 20.5 mg/L without cover crop) and soybeans (6.7 mg/L with cover crop vs 10.9 mg/L without cover crop) (Figure 5).

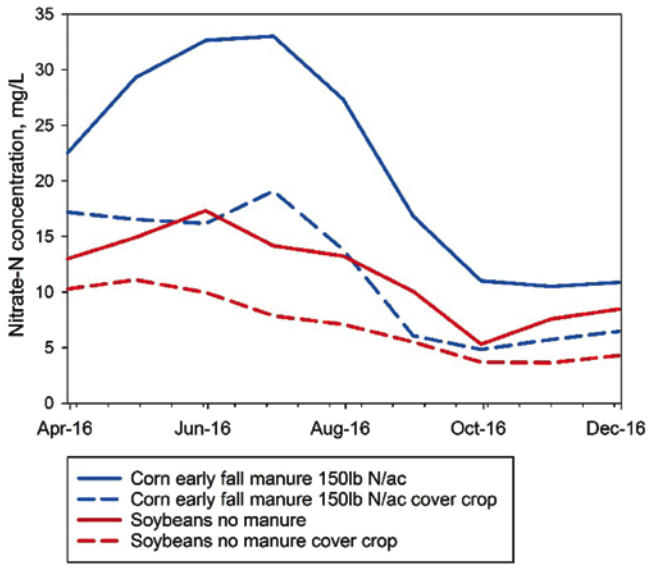

Figure 5. Flow-weighted nitrate-N concentrations with and without a cover crop in 2016.

Acknowledgements

Support was provided in part by USDA-Agriculture Research Service, USDA-Cooperative State Research, Education and Extension Service, Leopold Center for Sustainable Agriculture, National Pork Producers Association, Iowa Agriculture and Home Economics Experiment Station, and Iowa State University College of Agriculture and Life Sciences. Support is provided in part by the Iowa Pork Producers Association and Calcium Products, Inc.

For more information:

Dr. Matt Helmers
Dean's Professor and Extension Agricultural Engineer
Dept. of Agricultural and Biosystems Engineering
Iowa State University
Phone: 515-294-6717
Email: **mhelmers@iastate.edu**